madimack

Powered by invermac TECHNOLOGY

inverCHLOR

Mineral & Salt Chlorinator

INSTALLATION MANUAL

WELCOME

—

This is the instruction manual for your Madimack's InverCHLOR Mineral & Salt Chlorinator. This guide will help you understand the operation and maintenance of your chlorinator, ensuring clean and clear pool water for your enjoyment.

CONTENTS

1 SAFETY WARNINGS	4
2 SPECIFICATIONS	5
3 INVERCHLOR CONNECTIONS	6
4 Ph DOSER (Optional)	7
5 CONTROLLER OPERATION	8
5.1 Controller Commands & Functions	9
5.2 Controller Shortcuts	9
6 INSTALLATION	10
6.1 Pool Water Preparation	10
6.2 Adding salt before operation	10
6.3 Water Balance	10
6.4 Installing the InverCHLOR	11
6.4.1 Location	11
6.4.2 Mounting the InverCHLOR	11
6.4.3 Cell housing installation	11
6.4.4 Plumbing connections	11
6.5 Installing the pH Doser	12
6.5.1 Location of diluted acid container and pH Doser	12
6.5.2 Mounting the pH Doser	13
6.5.3 Connecting the pH Doser	13
6.5.4 Priming the pH Doser	13
7 FIRST TIME START-UP	13
8 OPERATION (USING THE INVERCHLOR)	14
8.1 Setting the 24-hour clock	14
8.2 Pool Volume Setting	14
8.3 Salt Type Selection	14
8.4 Setting the Mode (AUTO/ MANUAL)	14
8.5 Acid Dosing (with the added pH Doser)	14
8.5.1 Understanding the pH doser	14
8.5.2 Setting the Acid Dosage Volume	15
8.5.3 Average aily dose of diluted acid by pool volume	15
8.6 Setting the AUTO Mode Timers	15
8.7 Boost Mode	15
8.8 Heater Command (pump call)	15
8.9 Connecting the Heater Command Cable	16
8.10 WiFi and App Connection	16
9 MAINTENANCE	17
9.1 Restore Factory Settings	17
9.2 Power-down Memory	17
9.3 Adding Salt or Minerals	17
9.4 Measuring Salinity reading	17
9.5 Backwashing and Draining Water	17
9.6 Cell Maintenance	17
9.6.1 Cleaning the Cell (only if required)	17
9.6.2 Removing the Cell Plates from the Cell Housing	17
9.7 Low Chlorine Protection	18
9.8 pH Doser Maintenance	18
9.9 Error Codes	19
9.10 Display Indicators	19
10 Maintenance Mode - Authorised Technicians Only	20
11 Warranty	21

1 SAFETY WARNINGS

WARNING: General Information

1. Carefully read all the instructions in this manual and on the device. Failure to read and comply with the instructions can cause injury. This document must be given to the product owner, who should keep it in a safe place for reference.
2. Chemicals can cause internal and external burns. To avoid death, serious injury and/or damage to equipment, always wear personal protective equipment (gloves, goggles, mask, etc.) when servicing or maintaining this device. This device must be installed in an adequately ventilated place.
3. The appliance is not to be used by persons (including children) with reduced physical, sensory, or mental capabilities, or lack of experience and knowledge, unless they have been given supervision or instruction.
4. Children must not play with this device. User maintenance and cleaning must not be carried out by unsupervised children.
5. Use only genuine Madimack spare parts.

WARNING: Electrical Hazard

1. This equipment is intended to be used on swimming pools only.
2. Disconnect the equipment from the mains supply before any intervention or maintenance.
3. All electrical installations must be carried out by a qualified and approved electrician in accordance with the standards currently in force in the country of installation.
4. Check that the device is plugged into a power outlet that is protected against short-circuits. The device must also be powered via an isolating transformer or a residual current device (RCD)with a nominal operating residual current not exceeding 30 mA.
5. Check that the supply voltage required by the product corresponds to the voltage of the distribution network and that the power supply cables are suitable for the products power demand.
6. To reduce the risk of electric shock, do not use an extension cable to connect the device to the mains. Connect directly to a wall socket.
7. This device must not be used if the power cord is damaged. An electric shock could result. A damaged power cord must be replaced by after-sales service or similarly qualified persons to avoid danger.

2 SPECIFICATIONS

MODEL	inverCHLOR 10	inverCHLOR 20	inverCHLOR 30	inverCHLOR 40
100% Chlorine Production (salinity @ 3000ppm)	10g/hr	20g/hr	30g/hr	40g/hr
100% Chlorine Production (salinity @ 1200ppm)	4g/hr	9g/hr	14g/hr	18g/hr
Recommended Salinity	3000ppm (3g/L)			
Salinity Operating Range	1200-6000ppm			
Power Supply (v)	220~240VAC 50/60Hz			
Power Supply (A)	1.5A			
Cell Amps @3000ppm	4A	7A	10.5A	14A
Max Input Power (w)	64W	104W	151W	197W
Cell Voltage	12vdc			
Water Flow Rate	80-400lpm			
Water Connections	40/50mm			
Water Temperature	5ºC ~ 40ºC			
Ambient Temperature	-7ºC ~ 42ºC			
Cell Housing Max Pressure	450kPa (4.5 Bar)			
Cell-Housing Material	PETG (Chemical resistant thermoplastic polymer)			
IP Rating	IP65			
Cell Lifetime	> 10,000 Hours			
Controller Dimensions (mm)	327 x 117 x 150			
Cell Size (mm)	63*52	90*66	130*66	160*66
Plates (Quantity)	10	10	10	10

3 INVERCHLOR CONNECTIONS

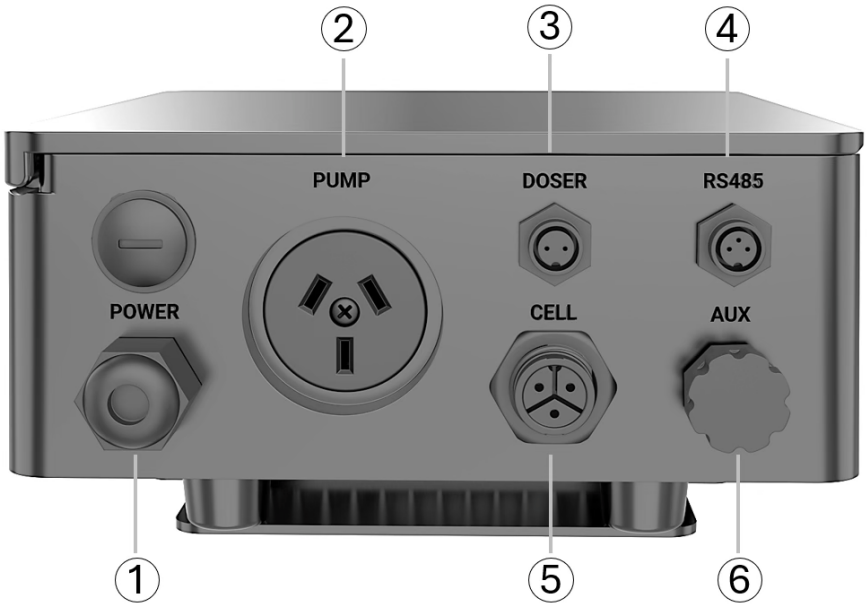

NO.	PORT NAME	DESCRIPTION
1	Power Input	AC Power Connector (220~240V, 50/60Hz)
2	Pump (Water Pump Socket)	Pump power outlet connection (max 9amps)
3	Doser (Optional)	Connector for the optional pH Doser. Push in the plug end and hand tighten the locking nut.
4	RS 485	**Future provision only
5	Cell Power Output	Connect the lead from the Cell housing to the port labelled CELL. Push in the plug end and hand tighten the locking nut
6	AUX (Heater)	If using the pump call (HEATER CMD) function, connect the communication cable from the heat pump to the supplied AUX plug, then push the plug into the port and hand tighten the locking nut.

TIP: The connection ports have keyways that only allow the cable connection in one orientation.

4 pH DOSER (optional)

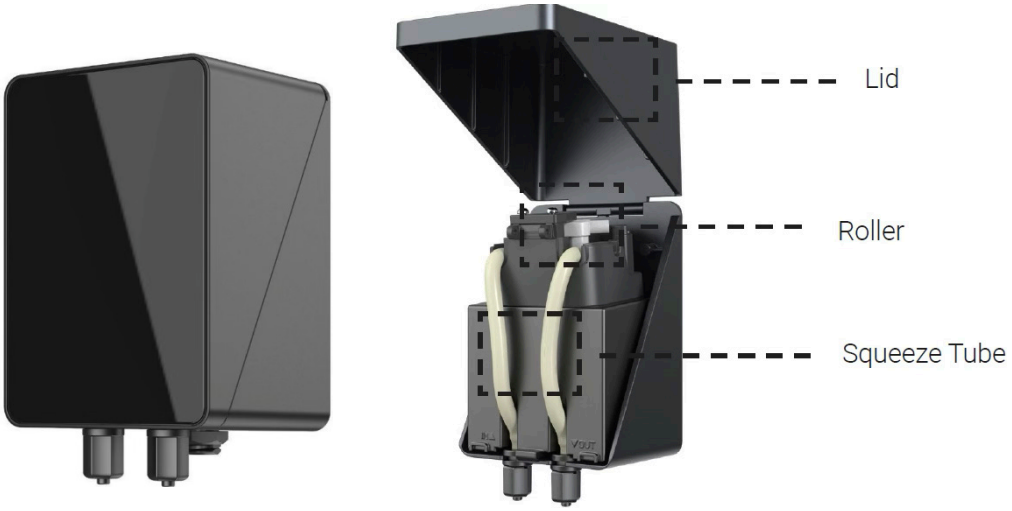

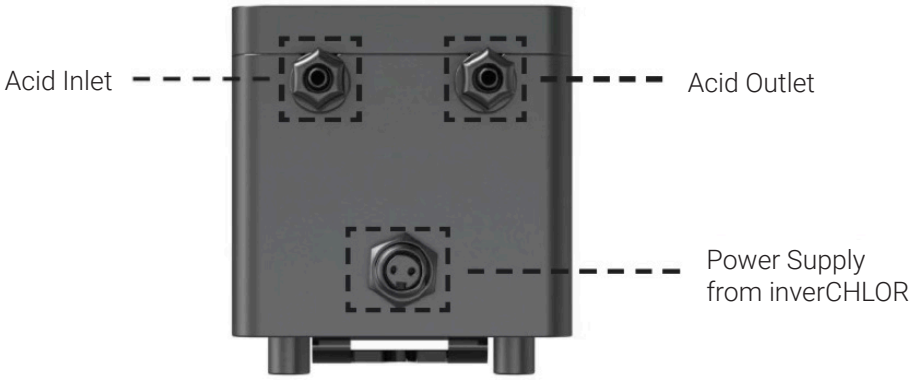

(Left to Right: Spare squeeze tube, Lubricant, Suction filter, Injection Tee, 5m Dosing tube)

5 CONTROLLER OPERATION

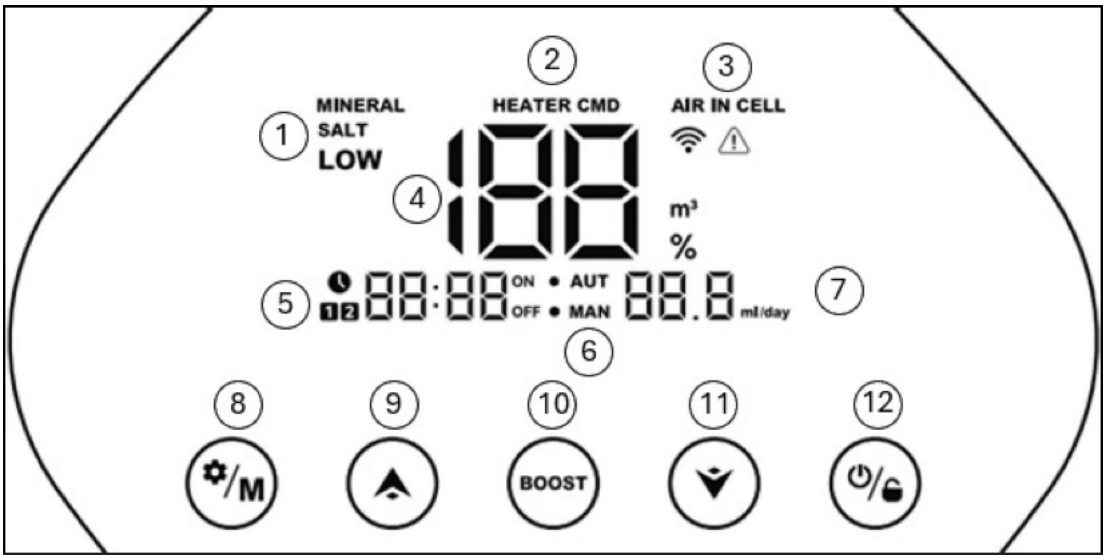

MARKED AREA	DESCRIPTION	ICON
1	• Pool Salt Type (mineral/salt) • Low Salt Alarm	MINERAL SALT LOW
2	Heater- pump call activated	HEATER CMD
3	• Air detected in cell • Wi-Fi connection status • Error notification	AIR IN CELL
4	• Chlorine Production% • Pool Volume m3	m³ %
5	• Timers Enabled • Time Display • Timer Active or Inactive	ON OFF
6	Chlorine Mode (Auto/Manual)	• AUT • MAN
7	Acid Dosing ml/day	ml/day
8	Settings/ Menu	
9	Adjust Up	
10	Boost Mode	BOOST
11	Adjust Down	
12	Power/ Lock Screen	

5.1 Controller Commands and Functions

COMMAND KEYS	FUNCTION
	• **Power ON/OFF:** Tap on home screen • **Lock/Unlock:** Hold for 3 seconds (The auto lock function will be activated after 1 minute without any operation)
BOOST	• **Activate BOOST:** Tap on for 24 hours constant operation • **Exit BOOST:** Hold for 3 seconds
M	• **Press:** Main Settings (Mode/Dosing/Timers) • **Hold for 3 seconds:** Pool Settings (Clock/Volume/Salt type) • **Save new setting:** If setting is flashing, hold for 3 seconds (or automatically saves after 1 minute without operation)
	• **Adjust Up:** On the home screen will adjust chlorine output up in 1 % increments. (hold to increase speed) • When limit is reached soft beep will sound
	• **Adjust Down:** On the home screen will adjust chlorine output down in 1 % increments. (hold to increase speed) • When limit is reached soft beep will sound

5.2 Controller Shortcuts

FUNCTION	SHORTCUT
Access the Start-Up Menu	In the home screen, hold M for 3 seconds
Restore Factory Settings	Enter the menu M, then hold ▲ & ▼ for 3 seconds
Activate WiFi Pairing	Enter the menu M, then hold M & ▲ for 3 seconds
Save Settings & Return Home	While in any menu, hold M for 3 seconds to return to the home screen
Prime the pH DOSER for 15 seconds*	While in standby, hold ▲ & ▼ for 3 seconds
Measure the Salinity	In the home screen, hold M & BOOST for 3 seconds

* Requires the optional pH Doser

6 INSTALLATION

6.1 Pool Water Preparation

Before operating the InverCHLOR it is important to prepare the pool water. The water chemistry must be balanced, and salt or minerals added. Certain adjustments to the chemical balance of the pool can take several hours.

6.2 Adding Salt Before Operation

1. Add the salt with the pump running and ensure it is fully dissolved before turning on the InverCHLOR cell output.
2. Ensure that the salinity is within the recommended range. The ideal level is 3000ppm.
3. Measure the salinity 6 to 8 hours after the amount has been added to the swimming pool..

IMPORTANT:

- If the water in the pool is not fresh and/or if it is liable to contain dissolved metals, use a metal remover, according to the manufacturer's instructions.
- If your water has previously been treated with a product other than chlorine (bromine, hydrogen peroxide, PHMB, etc.), neutralize this product or replace all the water in the pool.
- If using mineral salt (Magnesium chloride and / or Potassium chloride) add approx. 1.4 times the amount of normal salt. (Optimum mineral salt level 4200ppm)

6.3 Water Balance

The water must be balanced manually BEFORE the device is started.
The following table summarizes the recommended levels for the InverCHLOR. Your water should be checked regularly to maintain these concentrations to protect the equipment and minimize surface corrosion or deterioration.

CHEMISTRY	RECOMMENDED LEVELS
Salt	Salt 3000ppm (4200ppm if using minerals)
Free chlorine	Free chlorine 1.0 to 3.0 ppm
pH	pH 7.2 to 7.6
Cyanuric acid (Stabiliser)	20-50 ppm, 0 ppm in indoor pools (Add stabiliser only if necessary. Do not exceed 50ppm)
Total alkalinity	80 to 120 ppm
Water hardness (Calcium)	200 to 300 ppm
Metals	0 ppm
Algaecide	Use of algaecide is an option. Maintain copper <0.2ppm

6.4 Installing the InverCHLOR

WARNINGS

⚠ Choose a suitable, well-ventilated location within one metre of the filter equipment and mount the power supply vertically onto a wall or post that is at least as wide as the InverCHLOR controller.
⚠ Madimack advises that the power supply should not be placed within 3 metres of the pool water.
⚠ Connect the InverCHLOR power supply to an appropriate weatherproof power outlet/controller.
⚠ Ensure the unit is kept away from acid and other chemical storage areas, as acid and chemical vapours can corrode the electronics inside the unit.
⚠ The unit should also be kept away from heat sources. Proper ventilation is essential for correct operation.

6.4.1 Mounting the InverCHLOR

1. Screw the mounting plate to the wall.
2. Hang the InverCHLOR by aligning the lugs on the back of the InverCHLOR with the lugs on the wall bracket and sliding down.

6.4.2 Installing the Cell Housing

WARNINGS

⚠ Ensure the cell housing is the highest plumbing point to allow correct operation of the air sensor protection
⚠ The Cell housing should be installed as the last piece of equipment before the water returns to the pool.

IMPORTANT: The solvent cement or primer can cause damage if allowed to contact the threads or the orings. This will prevent a seal causing a leak.

6.4.3 Cell housing installation

1. The cell housing should be installed in a horizontal position to ensure adequate water flow over the cell plates and the air sensor. Failing to install in the is way may cause products faults and void warranty.

⚠

NOTE: If the cell housing is to be installed in a vertical orientation, the power supply connection cap and the air sensor must be the highest point of the installation. This may also reduce performance of the InverCHLOR functionality.

Warning: Not following this guideline is a safety risk and will void warranty.

6.4.4 Plumbing Connections

1. The InverCHLOR is supplied with 40mm and 50mm unions to connect to the PVC plumbing.
2. Ensure a suitable solvent cement is used to glue the unions to the pipework
3. To avoid turbulent flow causing false readings with the air sensor, ensure a minimum of 200mm pipework for the inlet and outlet of the cell housing.
4. Ensure the nuts are over the union tails before gluing them onto the pipework.
5. Once the solvent cement has set, place the cell housing onto the pipework and hand tighten the union nuts with the orings in place.

IMPORTANT: The solvent cement or primer can cause damage if allowed to contact the threads or the orings. This will prevent a seal causing a leak.

6.5 Installing the pH Doser

The Madimack pH Doser is an automated algorithmic acid dosing pump designed to help maintain the pH levels in a chemically balanced pool.
The pH Doser will dose controlled amounts of diluted acid only during the operating timers of the InverCHLOR. The amount dosed is based on the setting on the InverCHLOR made by the installer or operator.

NOTE: It is the responsibility of the owner to continually monitor the operation and maintenance of this product to ensure safe operation and prevent damage to surrounding equipment or negative effects to the pool chemistry.

WARNINGS:
If the following instructions are not followed, there can be damage to persons & products. This may also void warranties.
⚠ Suitable Personal Protective Equipment (PPE) must be worn during the process. Consult warnings on chemical containers where necessary.
⚠ The pool acid MUST be diluted before use. Always add the small amount of chemical to a large amount of water.

6.5.1. Location of diluted acid container and pH Doser

⚠ The acid drum used for the pH Doser pump may release corrosive fumes that can damage pool equipment and electrical or metal items.
⚠ The diluted acid connected to the pH Doser must be stored in a well-ventilated area and more than 1m away horizontally from any pool equipment.

1. The pH Doser should be a minimum of 2m away from the acid drum but no higher than 1.5m above it.
2. The diluted acid connected to the pH Doser must be stored in a well-ventilated area and more than 1m away horizontally from any pool equipment.
3. A breather tube should be used out of the diluted acid container.

Note: The pH Doser is supplied with 5m of tubing to be used for suction and dosing.

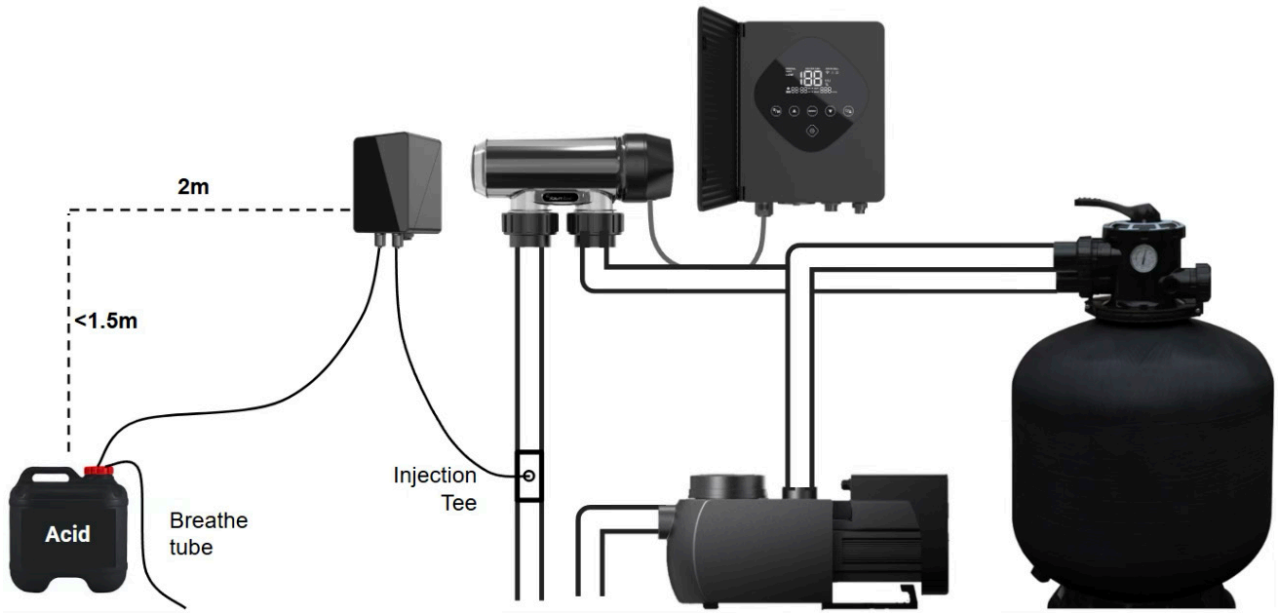

6.5.2 Mounting the pH Doser

1. The pH Doser comes with a mounting bracket attached.
2. Fix one of the self-tapping screws into the desired location and hang the dosing pump using its wall bracket on the back
3. Connect the power supply cable to the port on the InverCHLOR marked 'DOSER'.

6.5.3 Connecting the pH Doser

1. The supplied tubing will be used for the suction and dosing lines.
2. Ensure the minimum distances are met using the diagram above.
3. The tubing should enter the chemical drum through an airtight hole created with a drill bit the same size as the dosing tube.
4. Install the suction filter at the end of the suction line then connect to the inlet side of the dosing pump securing had tight with the locking nut.
5. Connect the outlet side of the pH Doser to the injection Tee and hand tighten the locking nuts.
6. Connect the power supply cable to the port on the InverCHLOR marked 'DOSER'.

Note: The injection Tee contains a one-way valve to prevent pool water flowing backwards into the chemical drum.

6.5.4 Priming the pH Doser

⚠ Pool acid must be diluted prior to use at a minimum dilution ratio of 2:1 (water to acid).
⚠ Only ever add acid to water – DO NOT add water to acid.

- Pool acid is typically 32% strength Hydrochloric Acid.
- Dilution is to reduce the corrosiveness and extend the working life of the product.

To dilute, add 5L pool acid, to 10L of tap water. This should be done in a container suitable for use with pool acid. Do not use Sulphuric Acid.

Test the connections by running a priming cycle.

1. Ensure the chemical drum contains diluted acid 2:1.
2. Turn the InverCHLOR off with its power button.
3. Hold ⊛ & ⊛ for 3 seconds to start the pH Doser for 15 seconds. You may need to run this again depending on the length of the tubing to check connections for leaks.

Refer to the operation section in this manual to understand setting the dosing amounts

7 FIRST TIME START-UP

These steps will automatically load when you first start the InverCHLOR or if you perform a factory reset.
Tip: The instructions for these steps are found in this manual under the 'operation' section.

1. Set the 24hr clock
2. Set the timers for AUTO mode
3. Set the pool volume
4. Select the salt type (salt/ mineral)

8 OPERATION (USING THE INVERCHLOR)

8.1 Setting the 24-hour clock

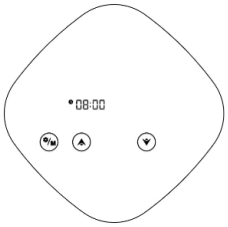

1. Hold for 3 seconds
2. When the local time is blinking, set hours of the local time by tapping and
3. Tap to set the minutes in the same way.
4. Hold for 3 secs to save the new time or press to continue to set the pool volume.

8.2 Pool Volume Setting

Note: 1m^3 = 1000L
1. Hold for 3 seconds
2. Press two times to skip past the clock settings.
3. The pool size value is now blinking, it can be adjusted from 5 to 150 m^3, in increments of 5m^3, by tapping or
Tip: Hold the button can accelerate the selection speed.
4. Hold for 3 secs to save the new volume or press to continue to set the salt type.

8.3 Salt Type Selection

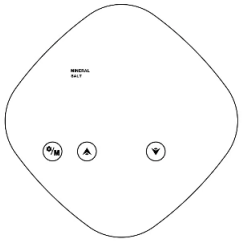

1. Hold for 3 seconds
2. Press three times to skip past the clock and volume settings.
3. When the SALT is blinking, it can be changed to MINERAL or SALT by tapping or .
4. Tap to complete the settings.

8.4 Setting the Mode (AUTO/ MANUAL)

1. The chlorinator can be configured to 2 different Chlorine production modes. These are selected by pressing the button then tapping or .
Auto Mode: Timer control of pump operation and chlorine output (1 or 2 Timers)
Manual Mode: Manual control of pump operation and chlorine output.

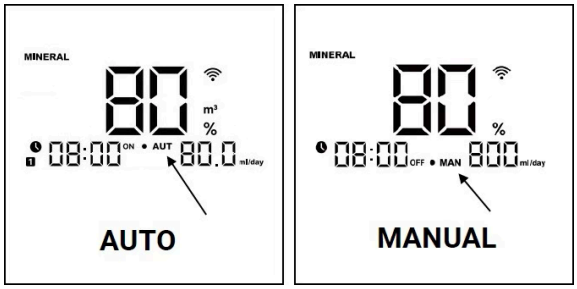

8.5 Acid Dosing (Optional pH Doser required)

8.5.1 Understanding the pH Doser

Maintaining a constant pH has many benefits including reducing the amount of chlorine required, saving on other chemicals and protecting the pool surface.

- If you have added the pH Doser, you can set the daily dosage amount to assist in maintaining a consistent pH level.
- Once the amount is set, the InverCHLOR will use an algorithm to determine the times to dose and the amount to dose at each interval.

TIP: The dosing amount can be set up to 999ml/day. It can be set in 10ml increments up to 999mls.

8.5.2 Setting the Acid Dosage Volume

IMPORTANT: This is a guide only. The required amount is affected by many variables.
TIP: During the initial startup period, have the water tested frequently (i.e. daily) and make small adjustments every 2-3 days, until the pH level remains balanced.

1. To access the acid dosing volume setting. Press ⊙ to show AUTO/ MAN.
2. Press ⊙ again to show the ml/day dosing amount flashing.
3. The amount can be adjusted from 0ml to 1.5L in increments of 50ml, by tapping or holding ⊙ or ⊙.
4. Hold the ⊙ button for 3 secs to confirm.

8.5.3 Average Daily dose of diluted acid by pool volume:

Pool Volume (L)	Daily Dose 32% Acid Diluted 2:1	Pool Volume (L)	Daily Dose 32% Acid Diluted 2:1
10,000	150ml (50ml acid)	60,000	900ml (300ml acid)
20,000	300ml (100ml acid)	70,000	1050ml (350ml acid)
30,000	450ml (150ml acid)	80,000	1200ml (400ml acid)
40,000	600ml (200ml acid)	90,000	1350ml (450ml acid)
50,000	750ml (250ml acid)	100,000	1500ml (500ml acid)

Note: Figures based on average summer conditions. Chlorine output will effect acid demand

8.6 Setting the AUTO Mode Timers

1. To access the timer settings. Press ⊙ to show AUTO/ MANUAL.
2. Ensure AUTO is selected and press ⊙ again to show the dosing amount flashing.
3. Press ⊙ again to show the **ON** and **1**.
4. Set the starting hour of the Timer 1 using ⊙ and ⊙
5. Save the time by tapping ⊙, then set and save the minutes in the same way.
6. Press ⊙ to save the Timer 1 **ON** time.
7. When **ON** disappears and **OFF** lights up, set the Timer 1 end time adjusting the hours and minutes in the same way.
8. Press ⊙ to save the Timer 1 **OFF** time
9. When **2** lights up, repeat steps 4-8 for Timer 2.

NOTE:
Do not overlap the timers. If timers are overlapped, it will not save the timer.
One timer can be used by not setting the second timer.

8.7 Boost Mode

Boost mode is useful when a countdown timer with 100% chlorine output is required. This can be after weather events, a high bather load or low chlorine levels detected requiring a boost.

1. To turn on boost mode, tap **BOOST** with the screen unlocked.
2. 100% output will display with a countdown timer starting at 23:59.
3. The InverCHLOR will run at 100% chlorine output for the duration of the timer also providing power to the filter pump.
4. To cancel boost mode at any time, tap **BOOST.**

NOTE:
• If alarms occur during the timer, the BOOST mode will cancel.
• If the InverCHLOR loses power, the 24-hour timer will restart when power is restored.
• When the boost mode stops, the system will revert to the settings prior to the boost.

8.8 Heater Command (pump call)

The InverCHLOR can act as a heat demand controller for the connected heater and filter pump.

- This allows the heat pump timers to start the filter pump without producing chlorine, allowing the heater to operate outside of the chlorination timers, avoiding over chlorinating.
- When the heater timers activate, the system sends a pump call signal, which is indicated by **HEATER CMD** on the display screen, instructing the pump to start without the InverCHLOR.
- The heater (AUX) and filter pump (Pump socket) must be connected to the salt chlorinator.

8.9 Connecting the Heater Command Cable

1) You will receive this AUX cable with the Madimack InverCHLOR.	2) Connect the cable to the AUX input on the bottom of the InverCHLOR.	3) The other end of the cable will connect to the Quick connect socket on the heater labelled 'Pump Output ELV'.

4) Set the timers on the heater to operate the filter pump without the InverCHLOR producing chlorine.
5) When the heater timers are active you will see "HEATER CMD" on the display screen.

Diagram of Status Relationship:
This table represents when the Pool pump connected to the InverCHLOR will be powered ON

InverCHLOR Status	Heat Pump Status	Water Pump Status
OFF	OFF	OFF
OFF	ON	ON
ON	OFF	ON
ON	ON	ON

8.10 WiFi and App Connection

To connect the Madimack InverCHLOR to the Mobile App please follow these steps.

1. Download the Madimack or Invergo App on your smart device. Check the app compatibility note below.
2. Unlock the InverCHLOR and tap ⊙/M to enter the menu.
3. Hold ⊙/M and ⊙ for 3 seconds to enter Wi-Fi pairing.
4. ⛶ will illuminate in a counterclockwise pattern:
5. While the InverCHLOR is in pairing mode, open the App and press the **+** symbol to add a new device.
6. The App will scan the nearby area for products in pairing mode.
7. An image of the InverCHLOR screen will appear with an ADD button.
8. Press **ADD** then select the Wi-Fi network and enter your network Password.
   a. **NOTE** - The Madimack and InverGo App will only work on the 2.4ghz bandwidth. Ensure your Wi-Fi network is not using the 5ghz bandwidth for making this connection.
9. Select the product to add it into the App.
10. The InverCHLOR will then attempt the connection.
11. If ᯤ appears, the Wi-Fi is connected.
12. If EE appears, the Wi-Fi failed to connect, and it will revert back to main screen.

NOTE: SKU no. is used to find your compatible app. The SKU no. is found on the side of your InverChlor.

***** SKU ending with (-A) = Madimack App**

***** SKU without (-A) = Invergo App**

9 MAINTENANCE

9.1 Restore Factory Settings

- Tap ⊛ to enter the menu screen.
- Hold ⊛ and ⊛ for 3 seconds. A beep will sound.
- ⛶ will light up then the InverCHLOR will reset, and the first-time startup process will begin.

9.2 Power-down Memory:

If there is an abnormal power failure during operation, when the power is restored, the controller automatically restarts and continues to run according to the state before power failure.

9.3 Adding Salt or Minerals

⚠ **The InverCHLOR must remain OFF during this operation and until the additive is completely dissolved.**
⚠ **Operating the InverCHLOR with non-dissolved salt could irreversibly damage the cell and the power supply, and lead to a void of the warranty.**
⚠ **For any new pool builds please wait for four weeks before adding salt into any recently cement coated pool and discuss this process with your pool builder.**

1. Calculate the volume of the swimming pool and add 3-5 Kg of salt per 1000L.
2. The ideal salinity range is 3000-5000ppm.
3. Make sure the InverCHLOR is disconnected from power during the salt adding process.
4. Turn on the filtration system for at least 24 hours, allowing the salt to dissolve completely.
5. The salt dissolving process must be accelerated using a pool broom.
6. The salt concentration may reduce over time due to rain or other periodic freshwater contributions (topping up, backwashing, etc.).

IMPORTANT: Whenever the salt concentration needs to be corrected, pour salt as close as possible to the return jets. Never pour salt in the skimmers or near any suction inlets.

9.4 Measuring Salinity reading

With the InverCHLOR on, enter the 'Monitoring' screen by holding ⊛ and BOOST for 3 seconds.

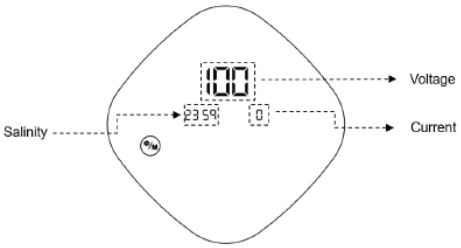

- Upon initial access to the interface, an automatic salinity measurement is conducted
- Salinity measurement: 20 minutes per time

9.5 Backwashing and Draining Water

As the InverCHLOR is protected by an air sensor it may produce an E3 (low flow) error when backwashing or draining water longer than 3 minutes. In the case you require further pump operation you can either clear the E3 error with the POWER button or plug the pump into a separate power outlet and operate it manually.

9.6 Cell Maintenance

9.6.1 Cleaning the Cell (if required)

The smart polarity inversion system is designed to prevent the electrode plates from corrosion and scaling (default setting is 4 hours). However, periodic cleaning may be required when the water hardness is too high.

The cleaning process is listed as follows:
1. Turn off the InverCHLOR and the filter pump, close the isolation valves, and ensure power is disconnected at the isolating switch.
2. Undo the two unions holding the cell housing to the plumbing.
3. Place the cell upside down and fill it with a salt cell cleaning solution so that the electrode plates are immersed.
a. Do not allow the cell cap assembly to be immersed.
4. Follow the instructions carefully on the salt cell cleaner product label.

5. Leave the cleaning solution to dissolve the scale deposit for about 15 minutes.
6. Dispose of the cleaning solution at an approved waste recycling site, never pour into the rainwater drainage system or into the sewers.
7. Rinse the electrode using clean water and put it back on the cell fixture collar (there is an alignment mark).
8. Retighten the union nuts, open the isolation valves and restart the InverCHLOR and filter pump.
9. If you do not use a commercially available cleaning solution, you can manufacture it yourself by carefully mixing 1 part of hydrochloric (pool) acid with 10 parts of water (Warning: always pour the acid into the water and not the opposite. Wear suitable protective equipment!).
10. Make sure that the setting of the polarity inversion cycles is adapted to the pool water hardness.

9.6.2. Removing the cell plates from the cell housing

1. Remove the end cap from the cell housing
2. Unscrew the locking ring on the end of the cell housing.
3. Carefully slide out the cell plates avoiding scratching or rubbing.

9.7 Low Chlorine Protection

- Overheat protection will be activated when the temperature inside the main controller is higher or equal to 70°C.
- Overheat protection will be lifted when the temperature drops below 68°C.

Current Chlorine Output	Low-Chlorine (Initial time)	Subsequent Less-Chlorine
0~20%	——	——
21~40%	5%	Determined at every 2-minute: 1) Decreasing by 3% for every 1°C. 2) Minimum down to 20%.
41~80%	15%	Determined at every 2-minute: 1) Decreasing by 9% for every 1°C. 2) Minimum down to 20%.
81~100%	20%	Determined at every 2-minute: 1) Decreasing by 12% for every 1°C. 2) Minimum down to 20%.

9.8 pH Doser Maintenance

⚠ Pool acid fumes are corrosive. It must be handled safely and according to the manufacturer's instructions.
⚠ Not diluting the acid will result in premature deterioration of the dosing and squeeze tube potentially leading to leaks and voiding warranty.
⚠ The use of undiluted acid is indicated by discoloration of the tubing and/or the tubing losing flexibility.
Following the maintenance schedule will prolong the life of the product and ensure correct operation.

PERIOD	MAINTENANCE
WEEKLY	• Check the level in the acid drum • Check for leaks
6 MONTHS	Lubricate the squeeze tube with a silicone-based lubricant i.e. Oring lubricant
YEARLY	Replace the squeeze tube

9.9 Error Codes

Pool acid fumes are corrosive. It must be handled safely and according to the manufacturer's instructions. Not diluting the acid will result in premature deterioration of the dosing and squeeze tube potentially leading to leaks and voiding warranty.
The use of undiluted acid is indicated by discoloration of the tubing and/or the tubing losing flexibility.
Following the maintenance schedule will prolong the life of the product and ensure correct operation.

Error Code	Descripiton	Logic	Action
E1	Abnormal Electrolysis	a. Electrolytic output power greater than 10% b. Voltage less than 0.8V or current less than 0.3A	A. E1 occurred B. Stop electrolysis: Restart electrolysis after 30 minutes. If abnormal electrolysis is detected 3 times in a row, electrolysis function cannot be restarted again.
E3	Abnormal water level	After the air switch indicator is triggered and continues for 120s	A.E3 occurred B. Stop the Filter Pump
E4	Over Temperature (Power pack)	Temperature >75°C (Inside)	A. E4 occurred B. Stop electrolysis
81~100%	20%	Determined at every 2-minute: 1) Decreasing by 12% for every 1°C. 2) Minimum down to 20%.	Determined at every 2-minute: 1) Decreasing by 3% for every 1°C. 2) Minimum down to 20%.

9.10 Display Indicators

Description	Logic	Action
AIR IN CELL	Read the status of the air switch for 15 seconds: If the air switch is in contact with air for 6 seconds or more before 15s of the current time, it is determined that air has entered the cell.	A. Stop electrolysis ⚠ **AIR IN CELL**
LOW SALT	When the salinity is detected to be less than 2500ppm for 30 seconds, it is determined to be Low Salt. (salinity alarm is adjustable in maintenance mode)	**LOW**
HEATER CMD	Read the on/off status of the heater for 15 seconds: If the heater starts/on for 6 seconds or more, it is determined that the heater is in ON status.	**HEATER CMD**

10 | Maintenance Mode – Authorised Technicians Only

1. Press ⊙/M to OFF status.
2. To enter 'Maintenance Mode' hold ⊙ and ⊙/M for 3 seconds.
3. Press ⊙/M for 3s to return the main Menu.

No.	Function	Photo	Remark
1	Full Screen Display		Test illumination of the screen
2	Cell Production		Test the cell output with On/Off option
3	Model Query		InverCHLOR 10/20/30/40 (Equal to 08/16/26/36)
4	Cell Life Span Status		Operating Hours of Cell plates
5	Internal Temperature display		Display the real time temperature °C of the power pack
6	Mode Display		Only F1 mode (future provision)

No.	Function	Photo	Remark
7	Polarity Reverse Setting (Salt)		Range: 1-10 h Default: 4 hr
8	Polarity Reverse Setting (Mineral)	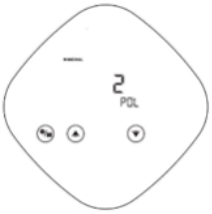	Range: 1-10hr Default: 2hr
9	Low Salt Alarm Setting		Range: 1500-3000 ppm Default: 2000 ppm
10	Acid Adding Testing	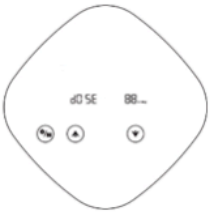	eg. Set 88 ml, the pump will add 88 ml of acid at one time.
11	Dosing Pump Testing/ Priming	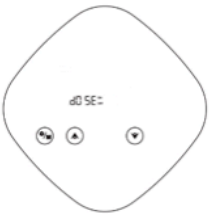	ON: Active Doser OFF: Non Doser

Limited Warranty

Standard Conditions: Madimack Pty Ltd (Australia) provide the following limited warranties. This warranty gives you specific legal rights, and you may also have other rights which vary from state to state or province to province.

IMPORTANT - Full Terms and Durations:
For a complete list of warranty periods and product-specific terms, please visit the warranty section at www.madimack.com

Statutory Rights: This document sets forth the comprehensive terms and conditions governing the warranty provided by Madimack. These terms are in addition to, and not a modification of or subtraction from, the statutory warranties and other rights and remedies contained in applicable local legislation, including the Australian Consumer Law where applicable.

Limited Warranty Coverage: Please visit www.madimack.com for full duration and product-specific terms. Madimack will, at its discretion, repair or replace any product proven to be defective in materials or manufacture during the warranty period. This warranty applies to domestic installations only, is personal to the original purchaser, and is non-transferable.

Exclusions: To the extent permitted by law, Madimack excludes all statutory or implied conditions and warranties. Madimack shall not be liable for any incidental or consequential damages (such as water loss or damage to surrounding structures). The following exclusions apply:

- Incorrect installation or operation resulting from failure to follow provided instructions.
- Damage caused by misuse, neglect, or "acts of God."
- Repairs or servicing performed by unauthorized dealers.
- Faults caused by the use of non-specified accessories or chemicals.
- General wear and tear of consumable items (e.g., seals, O-rings).

Procedure for Warranty Claims:

1. Initial Contact: Owners must contact Madimack via the online portal at www.madimack.com or the support numbers listed below.
2. Remote Troubleshooting: A service agent will attempt to resolve the issue via phone or email.
3. Service Type Determination:
    a. Return-to-Base: For portable or shippable units, you are responsible for disconnecting and transporting the product to an authorized service center. You are responsible for all freight and insurance costs to and from the supplier.
    b. On-Site Service: For fixed equipment, Madimack may coordinate an on-site technician. You are responsible for providing clear and safe access to the unit.
    c. Labor & Removal: You are responsible for the costs of removing the defective product and reinstalling the repaired/replacement product.

Required Documentation: All claims must include:

1. Proof of original purchase (Invoice with owner name and address).
2. A "Goods Return Authorization" or Service Ticket number provided by Madimack.

Australia
+61 1300 899 737
support@madimack.com
https://madimack.com/au

madimack